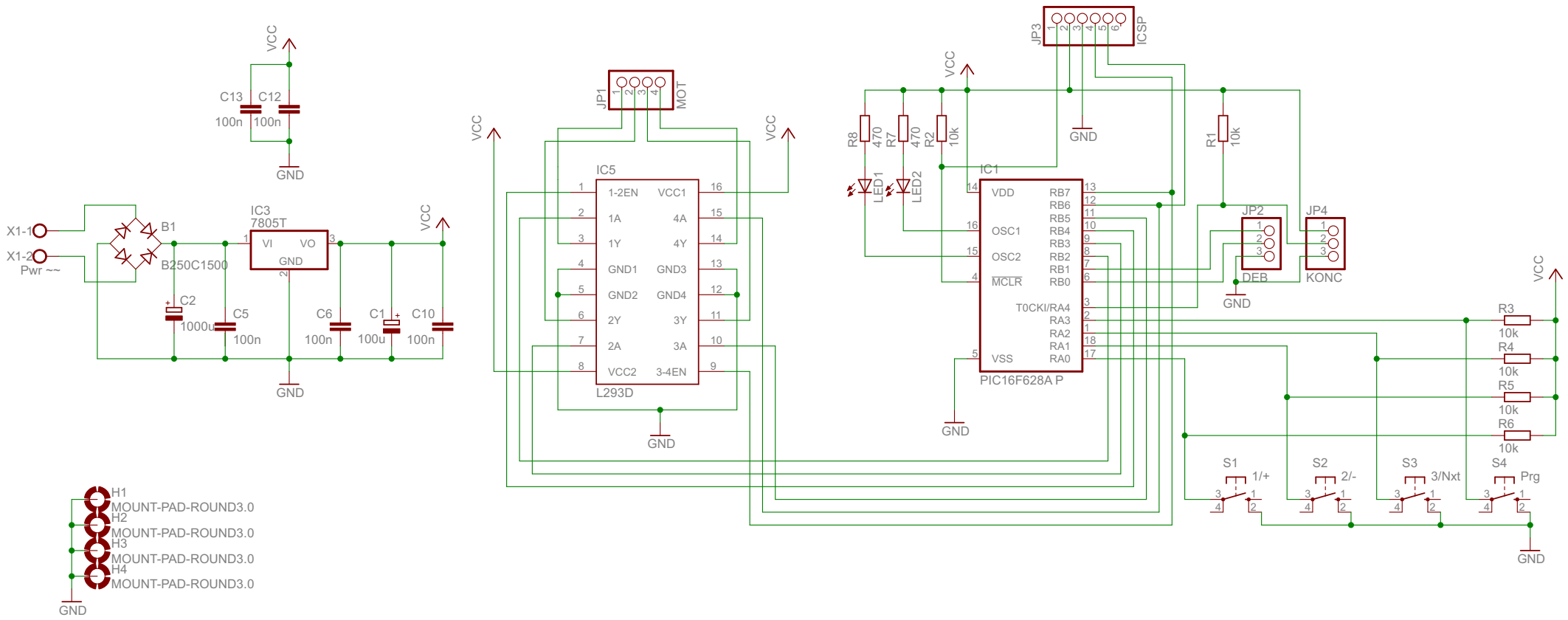
VCC
C13
C12
100n
100n
GND
X1-1
X1-2
Pwr ~~
B1
B250C1500
IC3
7805T
VI
VO
GND
C2
1000u
C5
100n
C6
100n
C1
100u
C10
100n
JP1
MOT
IC5
1-2EN
VCC1
1A
4A
1Y
4Y
GND1
GND3
GND2
GND4
2Y
3Y
2A
3A
VCC2
3-4EN
L293D
JP3
ICSP
R8
470
R7
470
R2
10k
LED1
LED2
IC1
VDD
RB7
RB6
RB5
OSC1
RB4
RB3
OSC2
RB2
MCLR
RB1
RB0
T0CKI/RA4
RA3
RA2
RA1
VSS
RA0
PIC16F628A P
R1
10k
JP2
DEB
JP4
KONC
R3
10k
R4
10k
R5
10k
R6
10k
S1
1/+
S2
2/-
S3
3/Nxt
S4
Prg
H1
MOUNT-PAD-ROUND3.0
H2
MOUNT-PAD-ROUND3.0
H3
MOUNT-PAD-ROUND3.0
H4
MOUNT-PAD-ROUND3.0