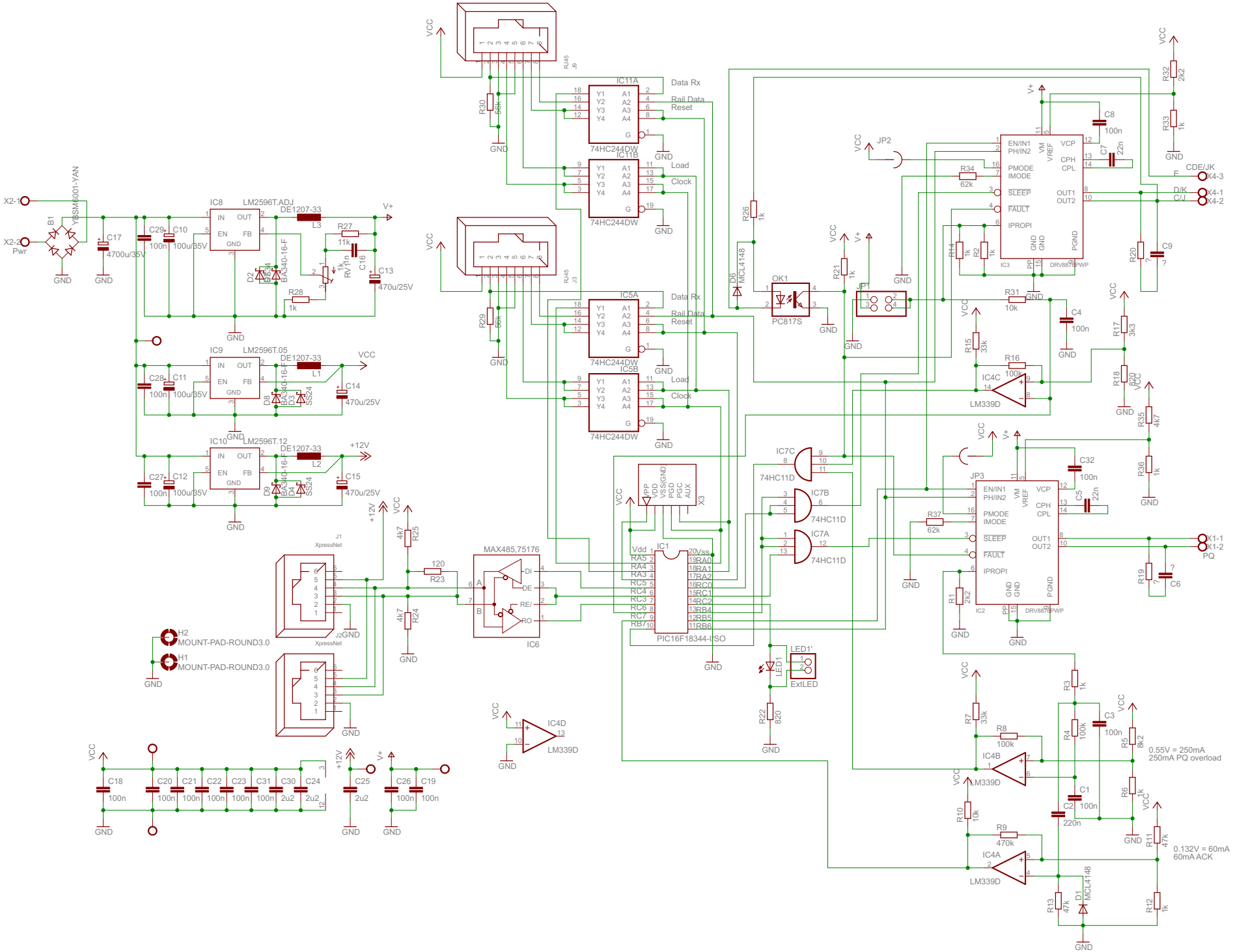
X2-1
X2-2
Pwr
B1
YBSM6001-YAN
GND
C17
4700u/35V
IC8
LM2596T.ADJ
IN
OUT
EN
FB
GND
C29
100n
C10
100u/35V
DE1207-33
L3
V+
R27
11k
C16
1n
RV1
1k
C13
470u/25V
D2
BA340-16-F
D5
BA340-16-F
R28
1k
IC9
LM2596T.05
C28
100n
C11
100u/35V
L1
VCC
C14
470u/25V
D8
BA340-16-F
D3
SS24
IC10
LM2596T.12
C27
100n
C12
100u/35V
L2
+12V
C15
470u/25V
D9
BA340-16-F
D4
SS24
J1
XpressNet
J2
XpressNet
H2
MOUNT-PAD-ROUND3.0
H1
MOUNT-PAD-ROUND3.0
R25
4k7
R24
4k7
R23
120
MAX485,75176
DI
DE
RE/
RO
IC6
RJ45
J9
RJ45
J3
R30
56k
R29
56k
IC11A
IC11B
IC5A
IC5B
74HC244DW
Data Rx
Rail Data
Reset
Load
Clock
IC1
PIC16F18344-I/SO
Vdd
Vss
RA5
RA4
RA3
RC5
RC4
RC3
RC6
RC7
RB7
RA0
RA1
RA2
RC0
RC1
RC2
RB4
RB5
RB6
X3
VPP
VDD
VSS(GND)
PGD
PGC
AUX
IC4D
LM339D
C18
100n
C20
100n
C21
100n
C22
100n
C23
100n
C31
100n
C30
2u2
C24
2u2
C25
2u2
C26
100n
C19
100n
R26
1k
D6
MCL4148
OK1
PC817S
R21
1k
JP1
IC7C
74HC11D
IC7B
74HC11D
IC7A
74HC11D
LED1
LED1'
ExtLED
R22
820
JP2
R34
62k
R14
1k
R2
1k
IC3
EN/IN1
PH/IN2
PMODE
IMODE
SLEEP
FAULT
IPROPI
VM
VREF
VCP
CPH
CPL
OUT1
OUT2
GND
PGND
PP
DRV8876PWP
C8
100n
C7
22n
R32
2k2
R33
1k
CDE/JK
F
X4-3
D/K
X4-1
C/J
X4-2
R20
?
C9
?
R31
10k
C4
100n
R15
33k
R16
100k
IC4C
LM339D
R17
3k3
R18
820
R35
4k7
R36
1k
JP3
IC2
C32
100n
C5
22n
R37
62k
X1-1
X1-2
PQ
R19
?
C6
?
R1
2k2
R7
33k
R8
100k
IC4B
LM339D
R10
10k
R9
470k
IC4A
LM339D
R3
1k
R4
100k
C3
100n
R5
8k2
0.55V = 250mA
250mA PQ overload
C1
100n
C2
220n
R6
1k
R11
47k
0.132V = 60mA
60mA ACK
R13
47k
D1
MCL4148
R12
1k